ECE3204 Lecture 15

LM555 Timer (17.7)
Lab 4 Clock Circuit

Hand in: HW 4

Digital circuits are made from analog parts.

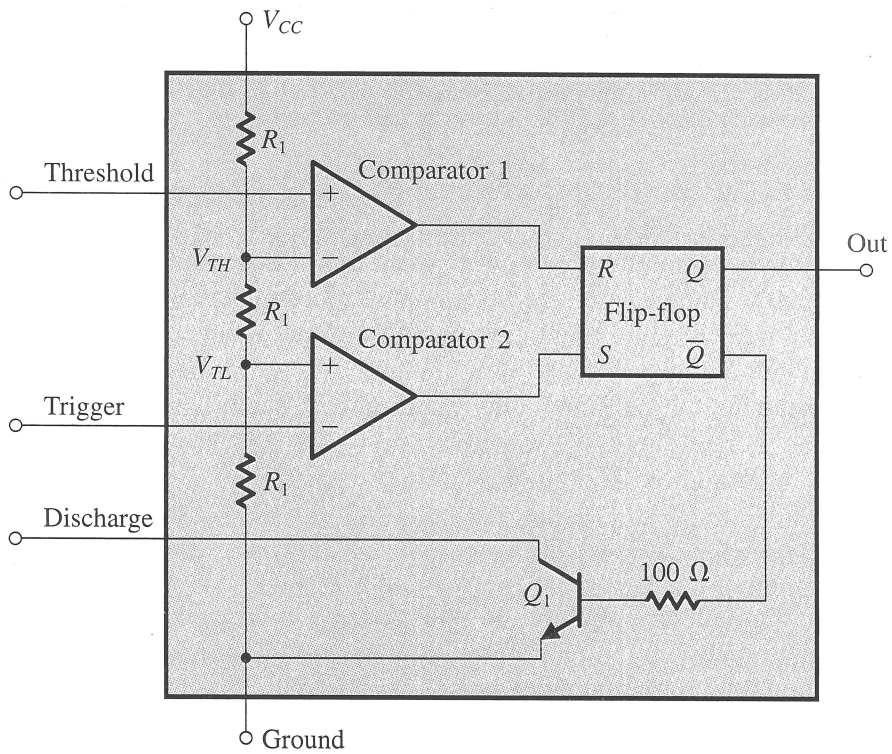

Set - Reset Flip Flop

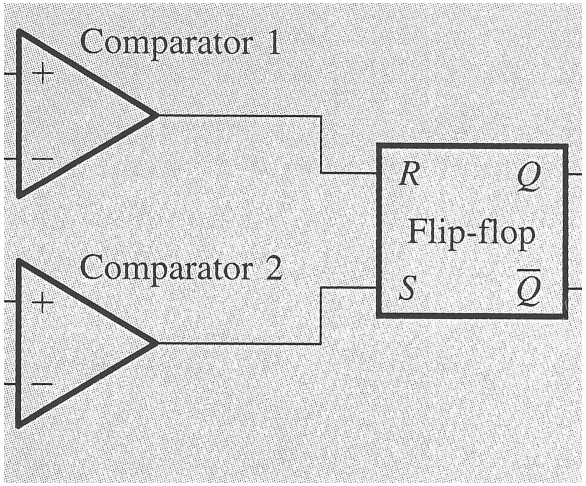

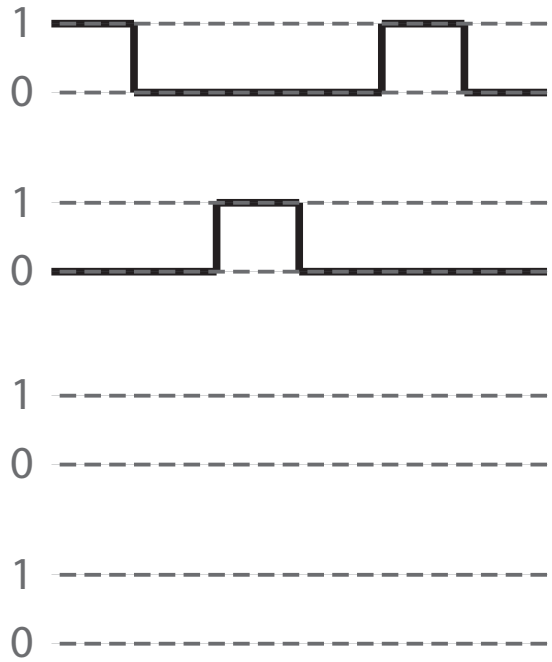

Lab 4 Clock Circuit

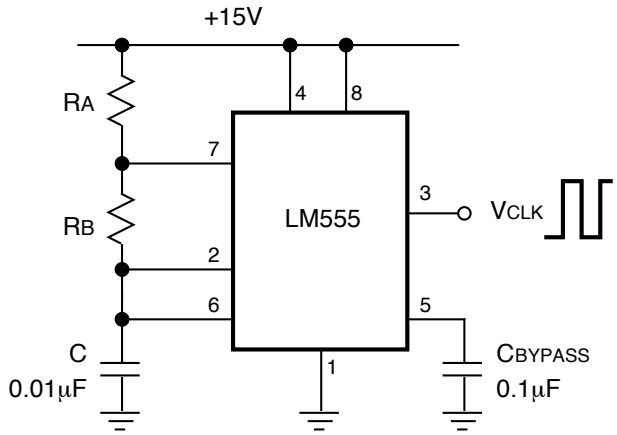

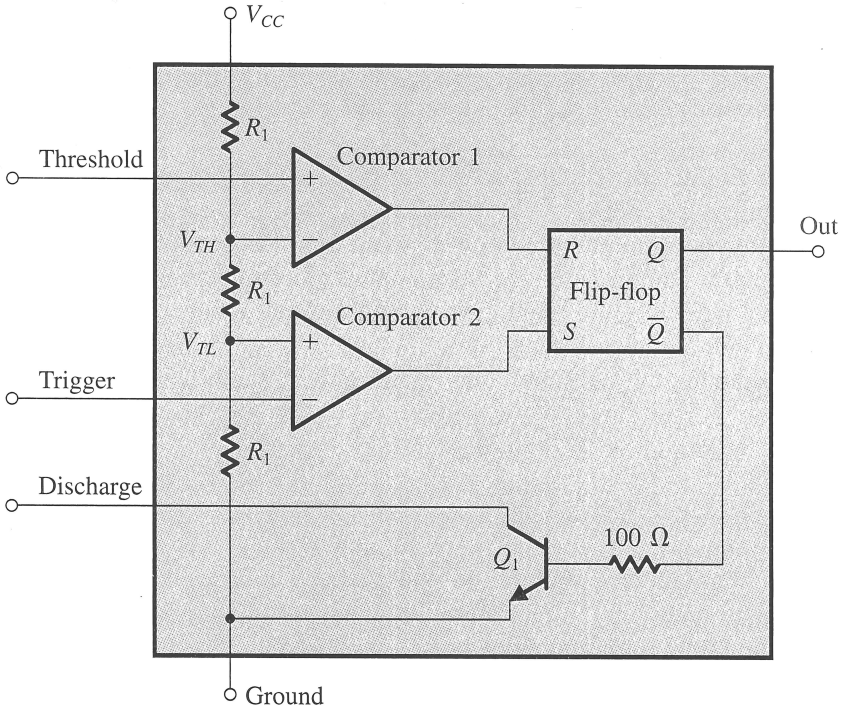

Lab 4 Clock Circuit Timing

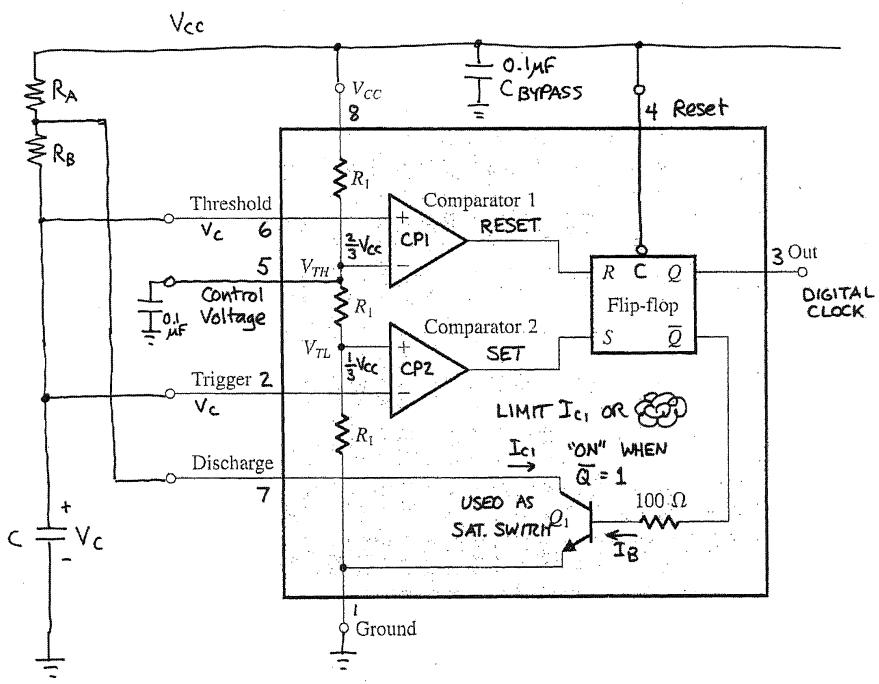

1 ----------

0 ----------

1 ----------

0 ----------

1 ----------

0 ----------

1 ----------

0 ----------