ECE3204 Lecture 11

Lab 2 Circuits Review
- Integrator (2.5)
- Push-pull
- Bypass capacitors

Finish
- Summation (2.4)
- Subtraction

Comparator (17.4)

Handout:
LM311 data sheet

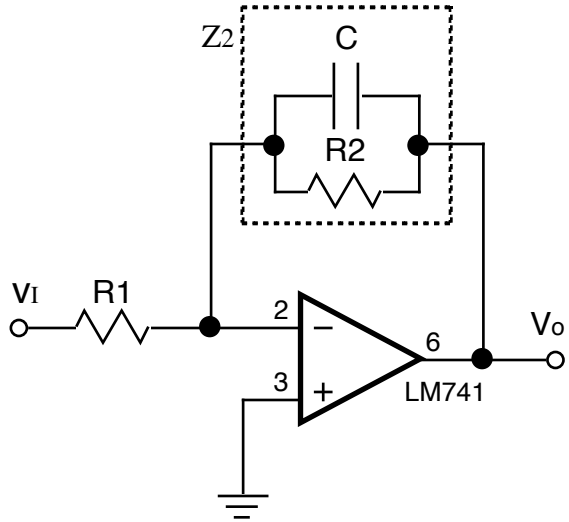

Figure 2.5

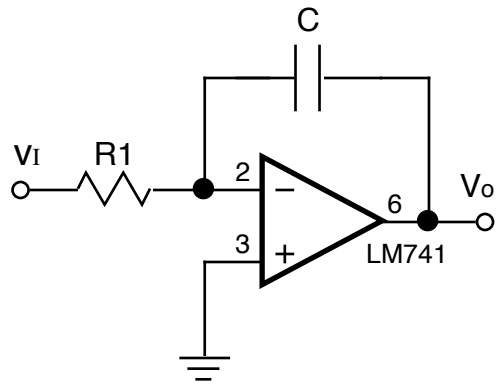

Figure 2.6

Push-Pull Amplifier

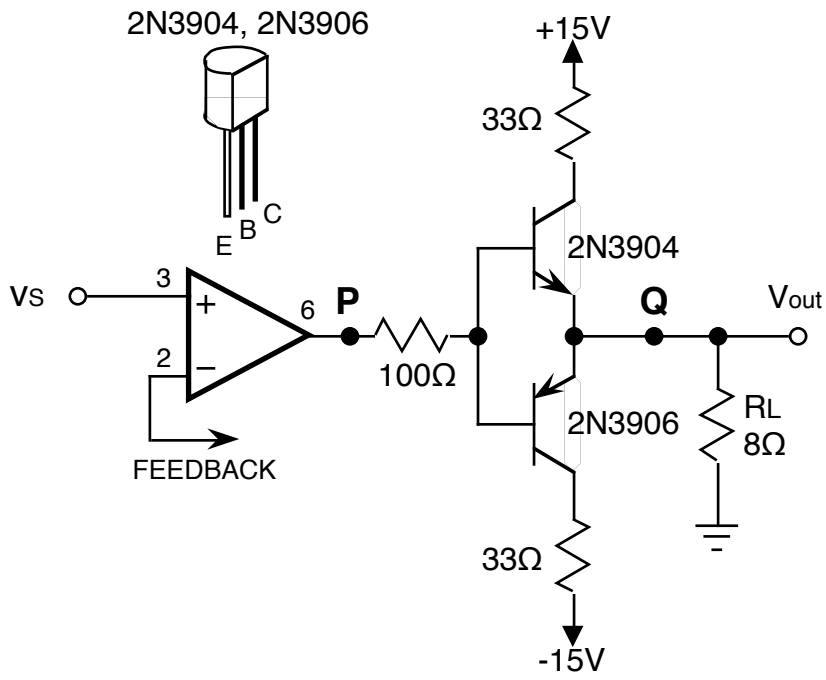

Figure 2.7

Bypass capacitors

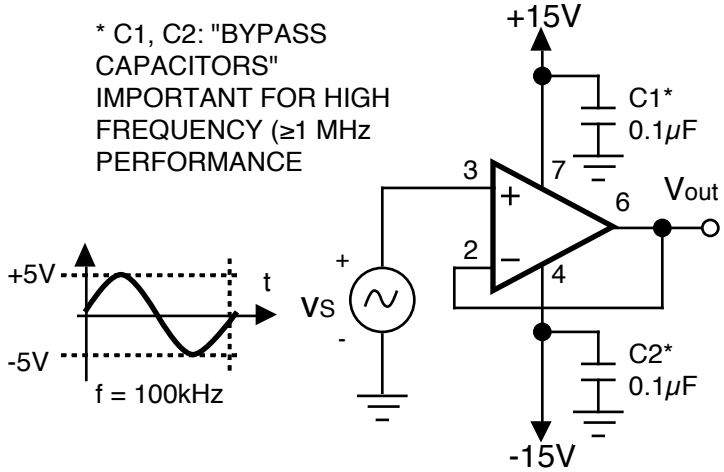

Figure 2.3

Summation

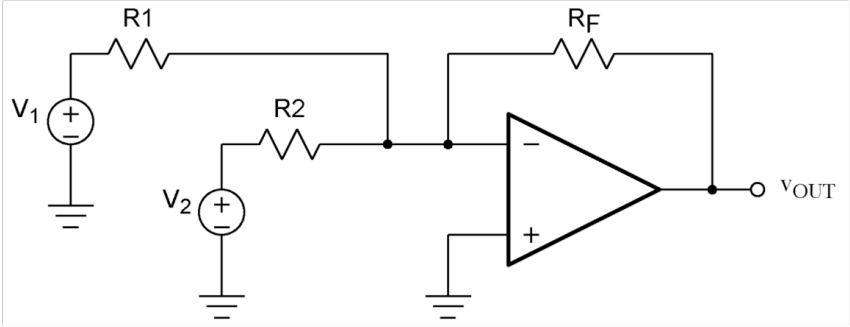

Subtraction

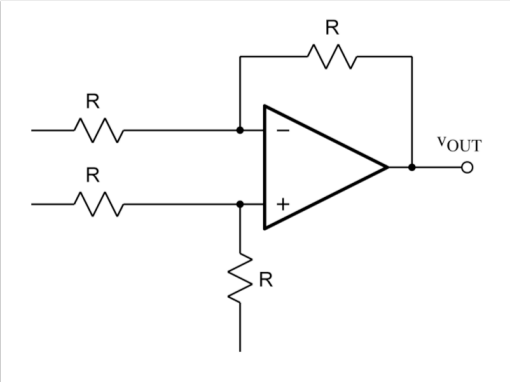

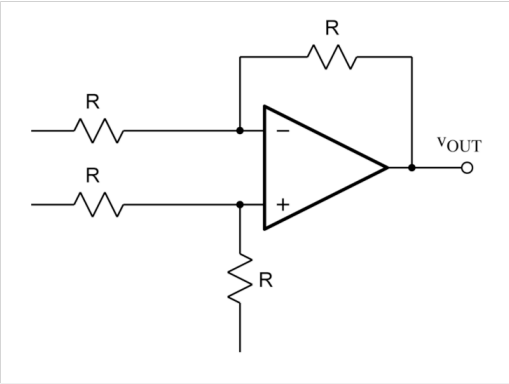

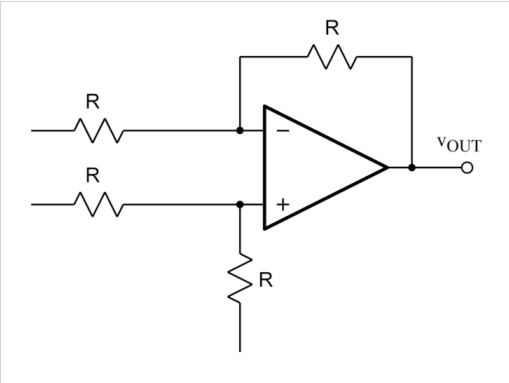

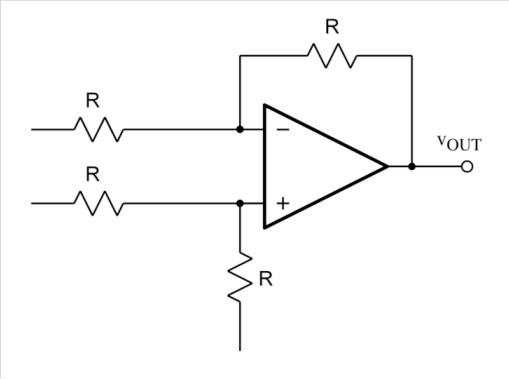
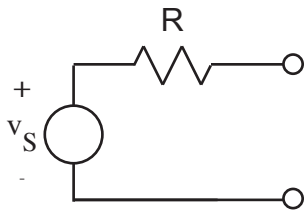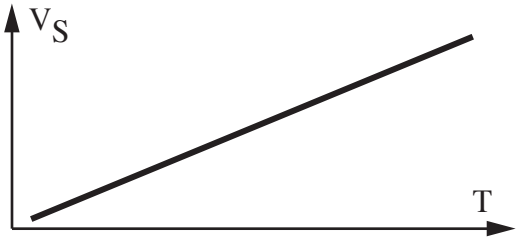
Application: Temperature Sensor for Heating Control