ECE3204 Lecture 4

Negative Feedback
Noninverting Gain (2.3)
Inverting Gain (2.2)
Bandwidth Limit (2.7)

Hand in: HW 1

HW 2 online

Noninverting gain op-amp circuit

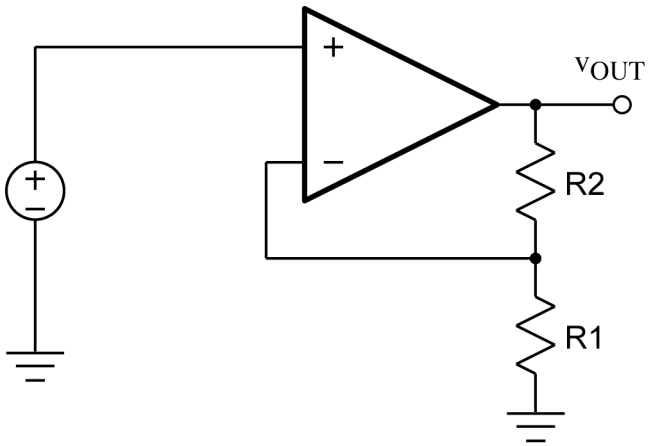

“Guess my rule”

Op-amp’s “rule”

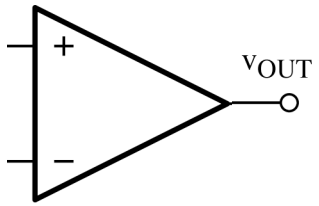

Analog Stick of Knowledge

Height - Voltage analogy

Noninverting gain op-amp circuit

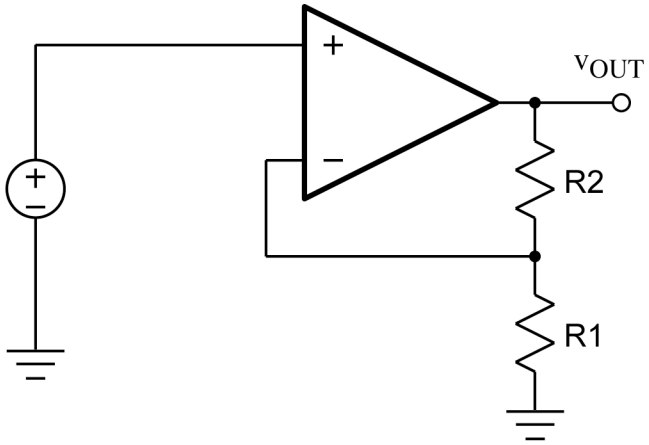

Op-Amp Analysis

FIRST: CHECK NEGATIVE FEEDBACK
1. Change v_{IN}
2. Follow change around loop
3. Does v_{OUT} change to keep v_-, v_+ together?
   If yes: negative feedback

THEN $v_- \approx v_+$

(How ≈ ? Depends on A large)

Simpler analysis of
noninverting gain op-amp circuit

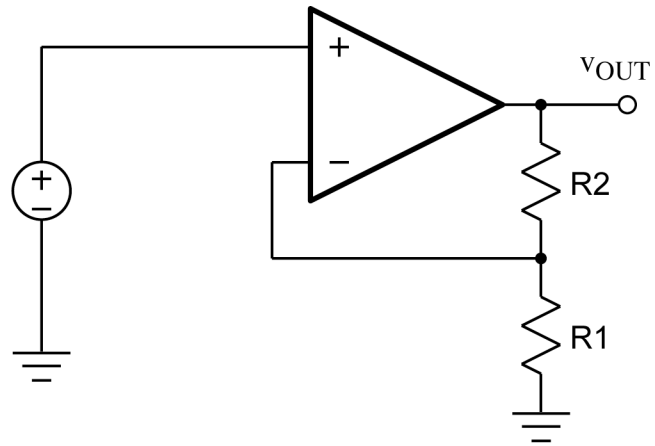

Examples

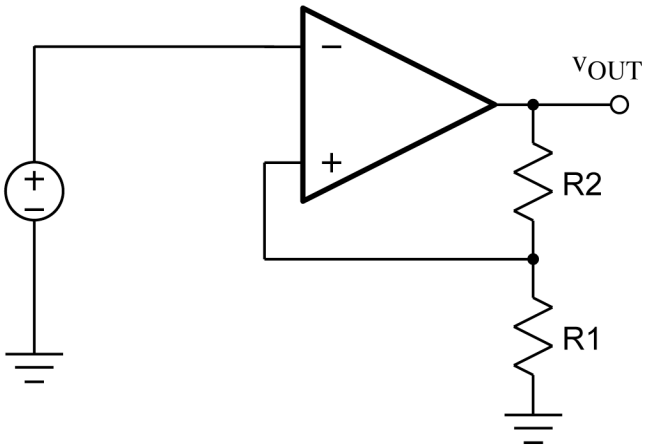

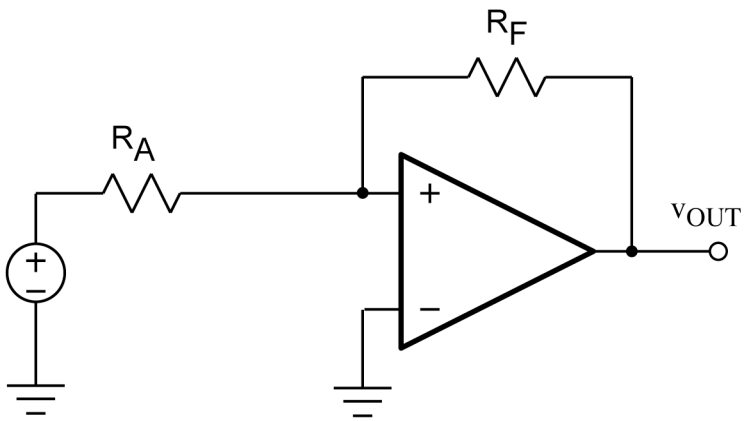
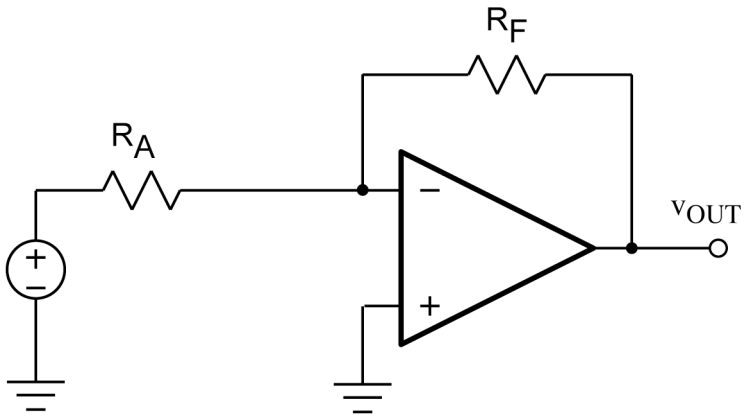
Inverting Gain Op-Amp Circuit