Name _____

ECE Box # _____

Problem	Score	Points
1	_____	25
2	_____	25
3	_____	20
4	_____	30

ECE3204 D2009

Microelectronics II

Exam 2

- This is a **closed book, closed notes test**! Use of calculators (no pre-stored formulas!) is allowed.
- Show **all** your work. Partial credit may be given. If you think you need something that you can't remember, write down what you need and what you'd do if you remembered it.
- Look for the simple, straightforward way to solve the problem for the level of accuracy required. **Don't get entangled in unnecessary algebra**.
- As in real life, some problems may give you more information than you need. Don't assume that all information must be used! It's your job to decide what's relevant to the solution.
- Unless otherwise indicated or implied, you may assume all op-amps to be ideal except for output voltage limit of ±15V.
- You will have 55 minutes to complete this exam. There are four problems on a total of 11 pages.

1. For each of the following circuits, find (if possible) the output voltage. If it is not possible to determine a voltage, indicate what the possible voltages are and what kind of information you would need to know to determine the voltage. Assume op-amps ideal <u>except for an output voltage limit of ±15V</u>.

[25]

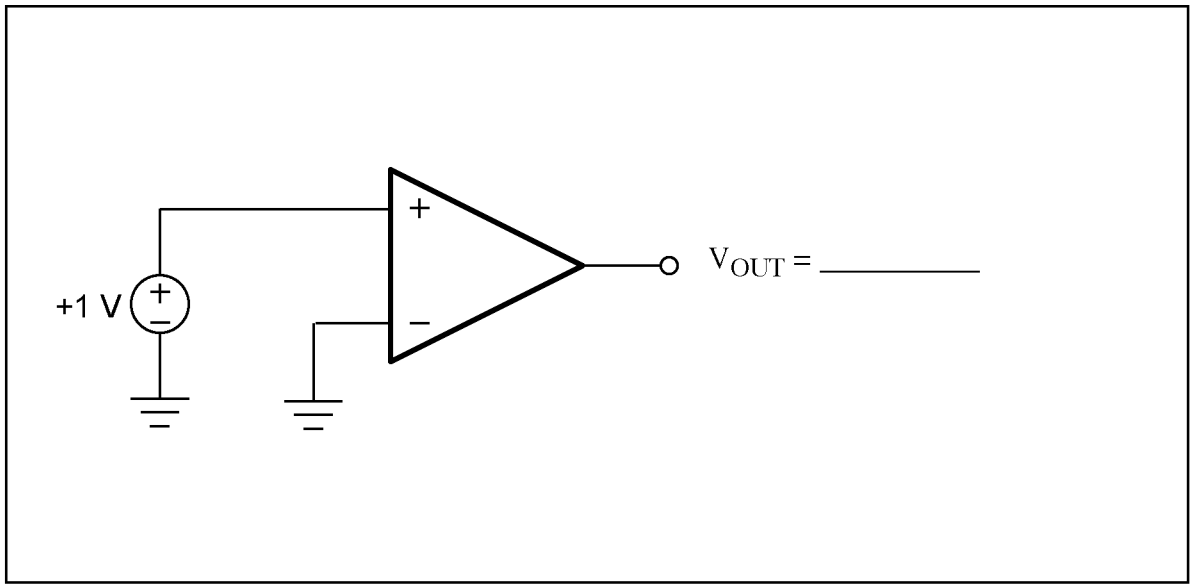

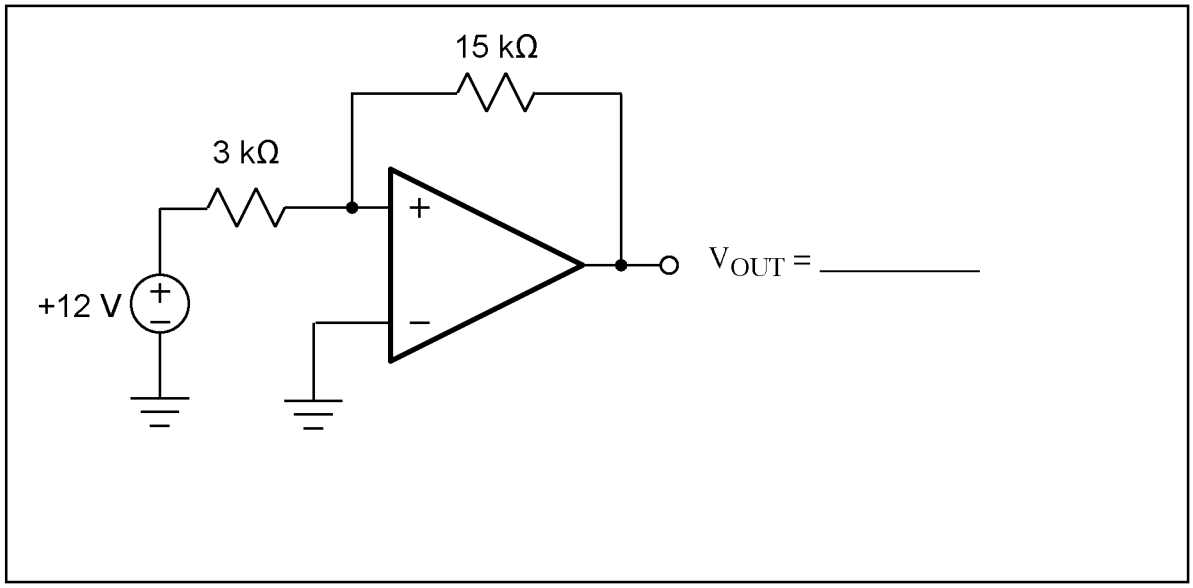

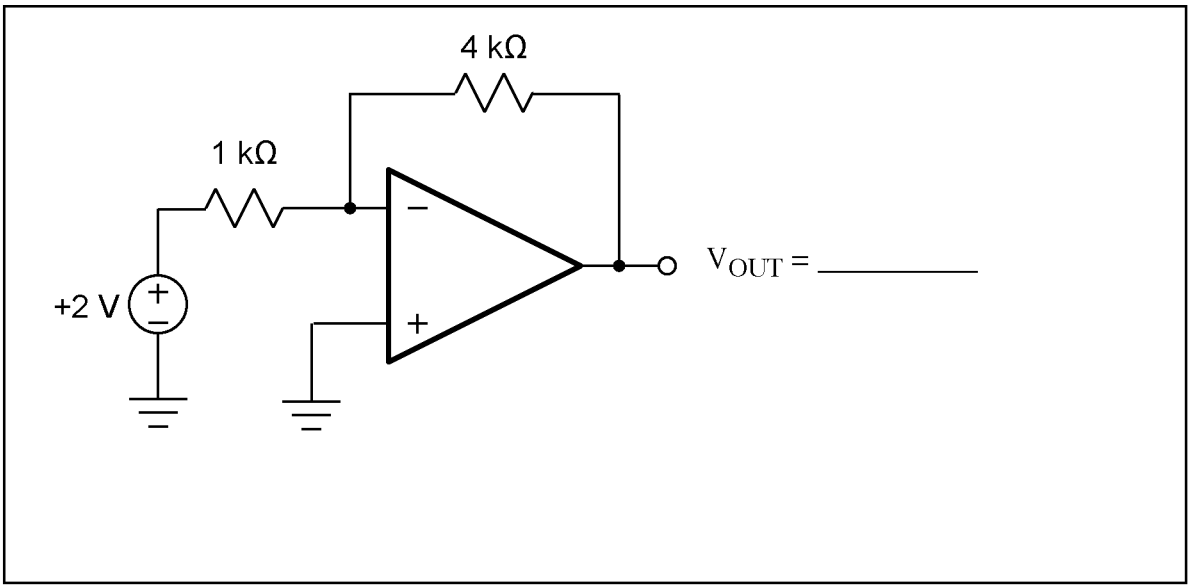
4 kΩ
1 kΩ
+2 V
V_{OUT} = _____

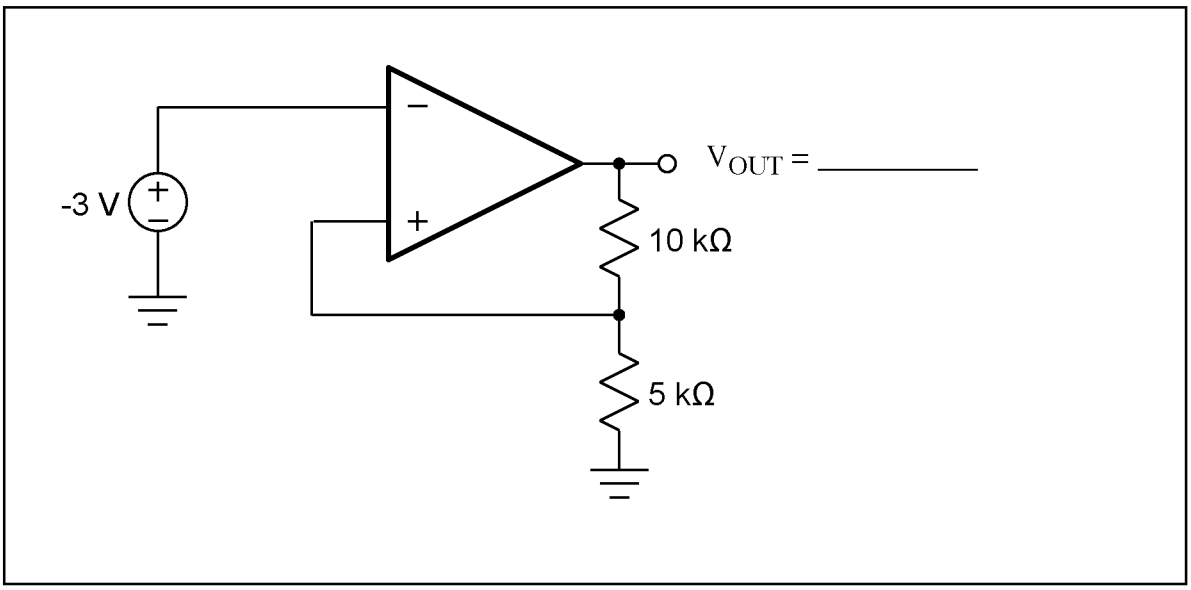
-3 V
V_{OUT} = _____
10 kΩ
5 kΩ

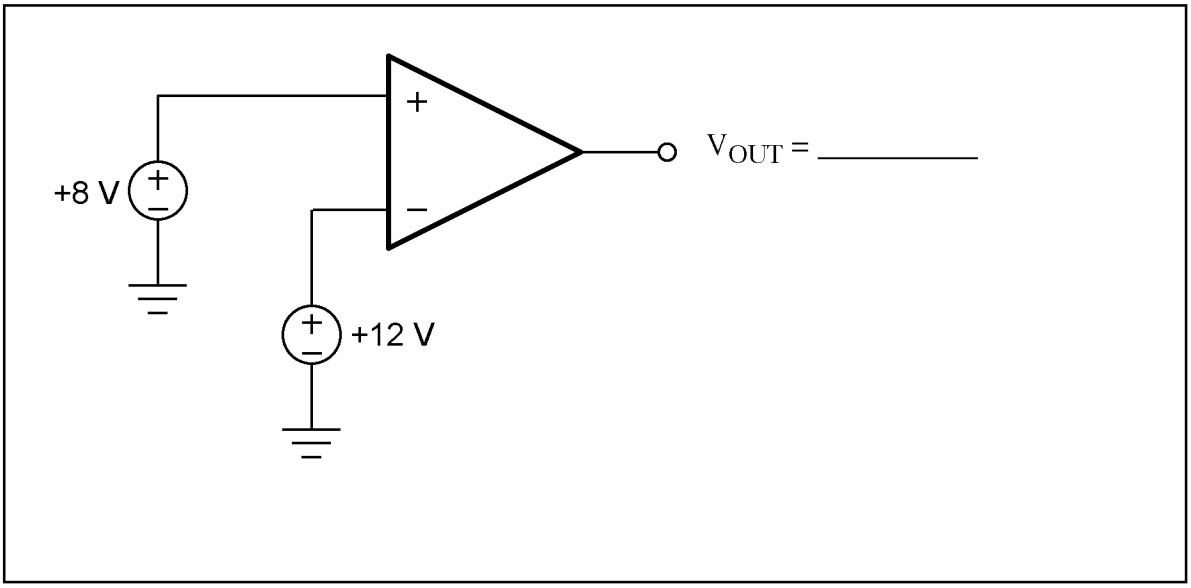
+8 V
+12 V
V_{OUT} = _____

2) That was fun, so let's do some more. Same rules:

For each of the following circuits, find (if possible) the output voltage. If it is not possible to determine a voltage, indicate what the possible voltages are and what kind of information you would need to know to determine the voltage. Assume op-amps ideal <u>except for an output voltage limit of ±15V</u>.

[25]

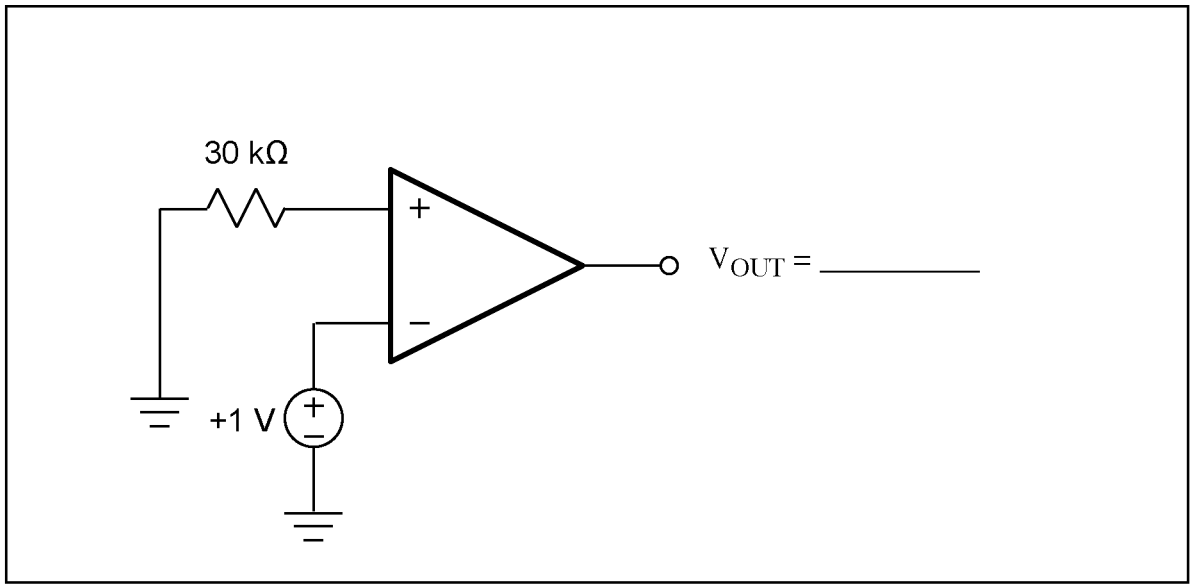

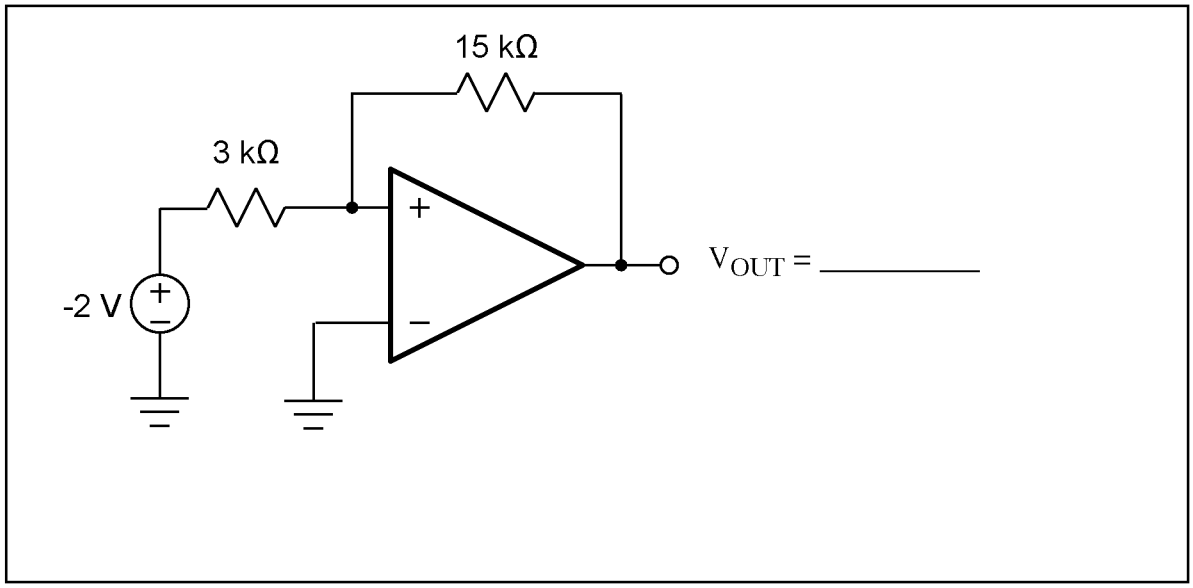

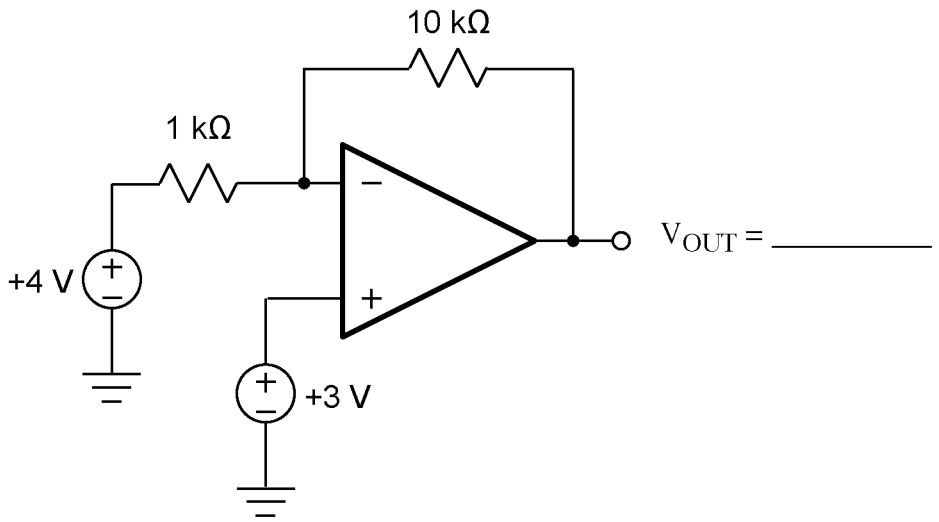
10 kΩ
1 kΩ
+4 V
+3 V
V_{OUT} = _____

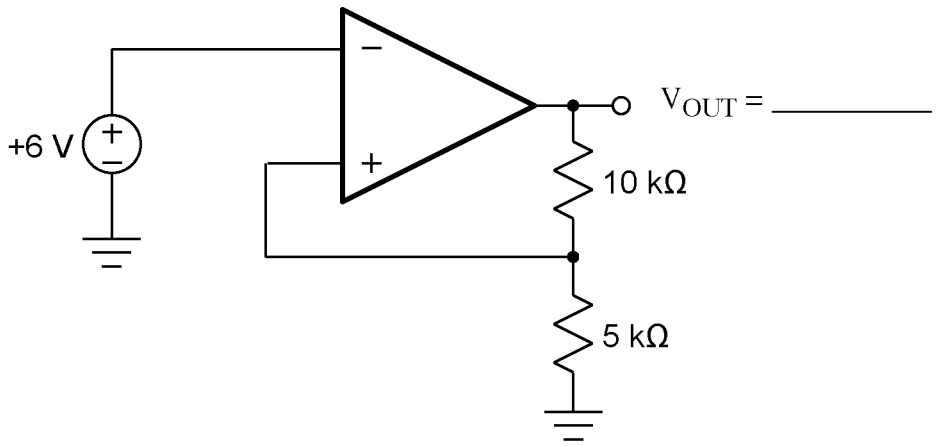
+6 V
10 kΩ
5 kΩ
V_{OUT} = _____

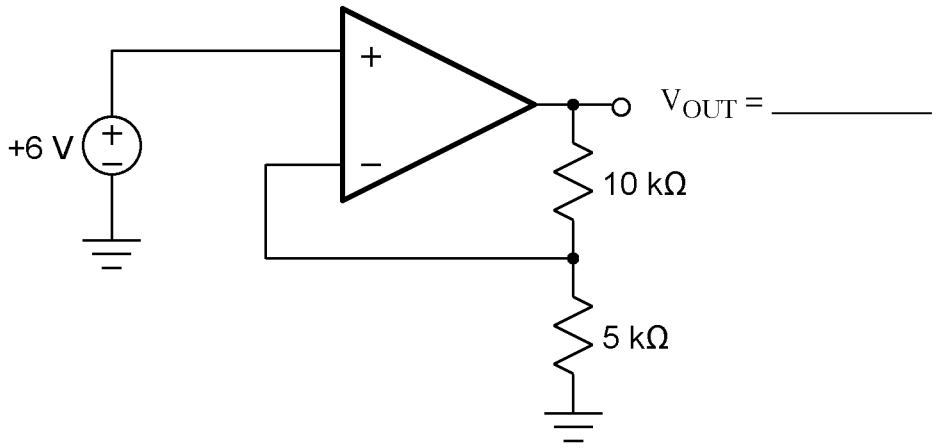
+6 V
10 kΩ
5 kΩ
V_{OUT} = _____

3. For the pulse width modulation (PWM) circuit investigated in Lab 3, a potential disadvantage is that the oscillator frequency was also changed when the modulating input changed. Another option for achieving PWM is shown in the circuit on the opposite page: adding a third op-amp and applying v_{IN} and v_{TRI} as shown.

In this design, the square wave amplitude is ±15V and the triangle wave amplitude is ±10V. The frequency is 40kHz.

a) Using the timing diagram axes on the opposite page, carefully sketch v_{OUT} for an input voltage of v_{IN} = +6V.

[10]

---

b) What is the required capacitor value C? Nonstandard value is OK.

[10]

C = _____

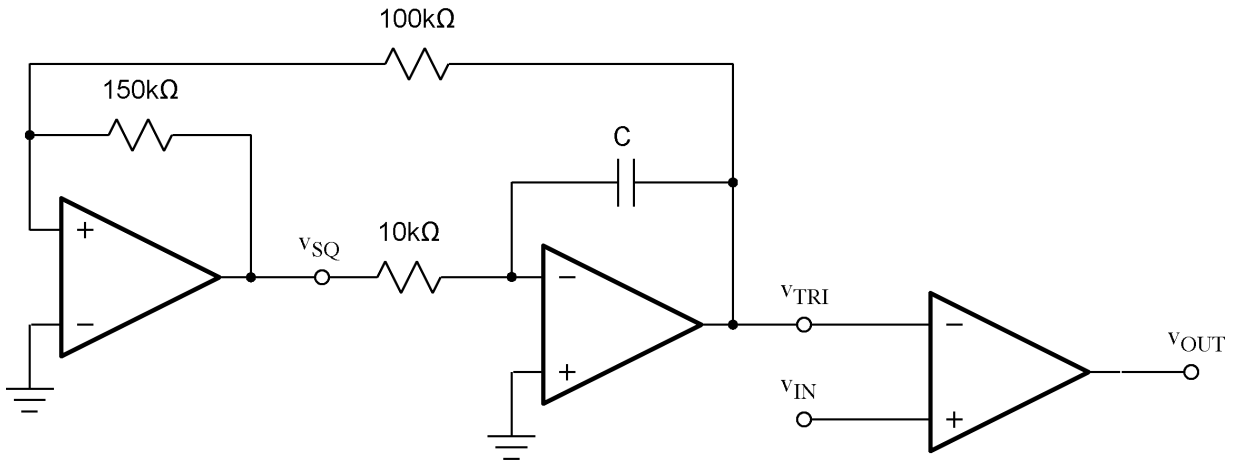
100kΩ
150kΩ
C
10kΩ
vSQ
vTRI
vIN
vOUT

Axes for (a):

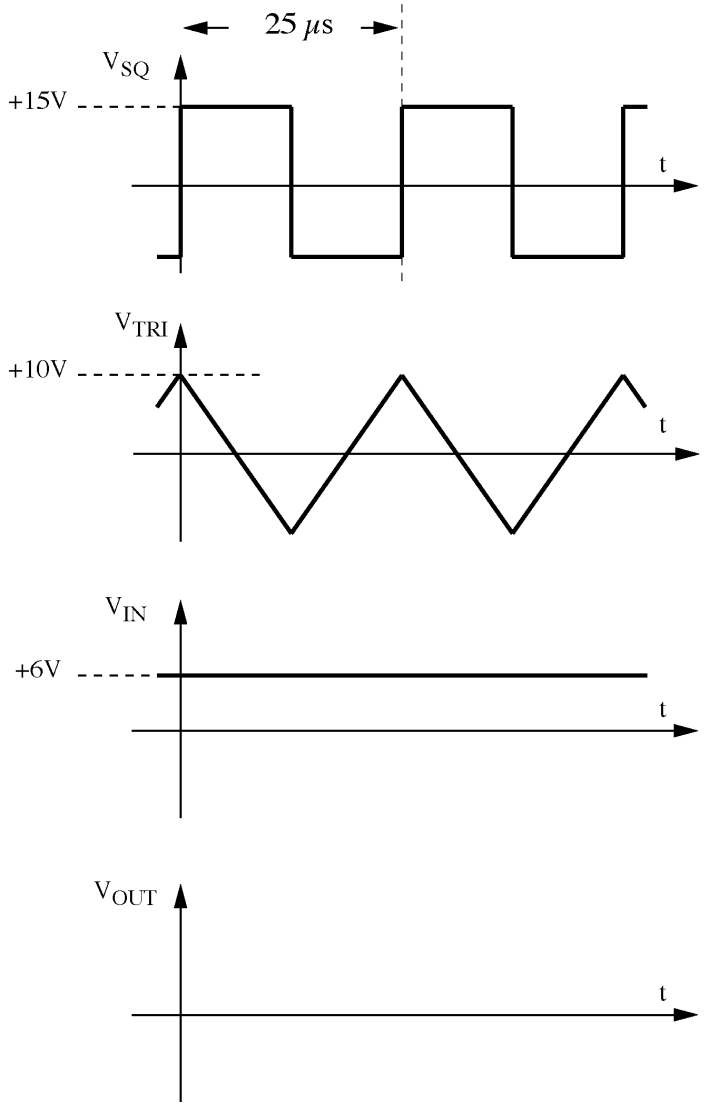
25 μs
VSQ
+15V
t
VTRI
+10V
t
VIN
+6V
t
VOUT
t

4. In this problem, you are working (as a "real world engineer" on your summer internship) with an LM555 clock circuit designed for a battery operated system. The power supply voltage is $V_{BATT} = +3V$, as shown on the opposite page. You are reconstructing the lab work of a former colleague who was let go in the most recent round of layoffs.

The first item you find in your colleague's lab notebook is a scope photo of waveforms measured in the LM555 circuit -- but the documentation is poor, so it isn't indicated which scope channel corresponds to which node in the circuit.

In the boxes shown in the schematic on the opposite page, write the scope channel number of the corresponding voltage waveform.

[15]

MORE ON PAGES 10 and 11 !!!

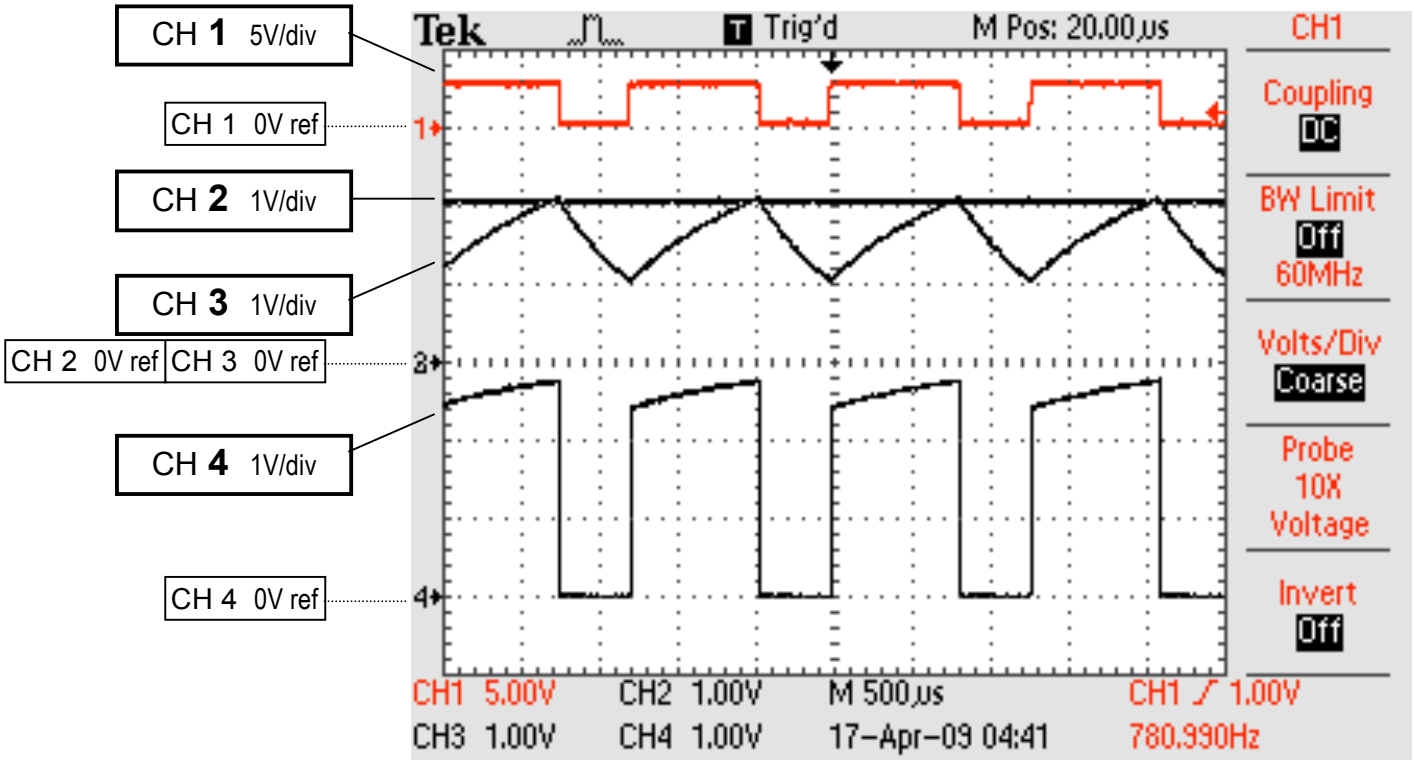
CH 1 5V/div
CH 1 0V ref
CH 2 1V/div
CH 3 1V/div
CH 2 0V ref
CH 3 0V ref
CH 4 1V/div
CH 4 0V ref
Tek
Trig'd
M Pos: 20.00µs
CH1
Coupling
DC
BW Limit
Off
60MHz
Volts/Div
Coarse
Probe
10X
Voltage
Invert
Off
CH1 5.00V
CH2 1.00V
M 500µs
CH1 ∕ 1.00V
CH3 1.00V
CH4 1.00V
17-Apr-09 04:41
780.990Hz

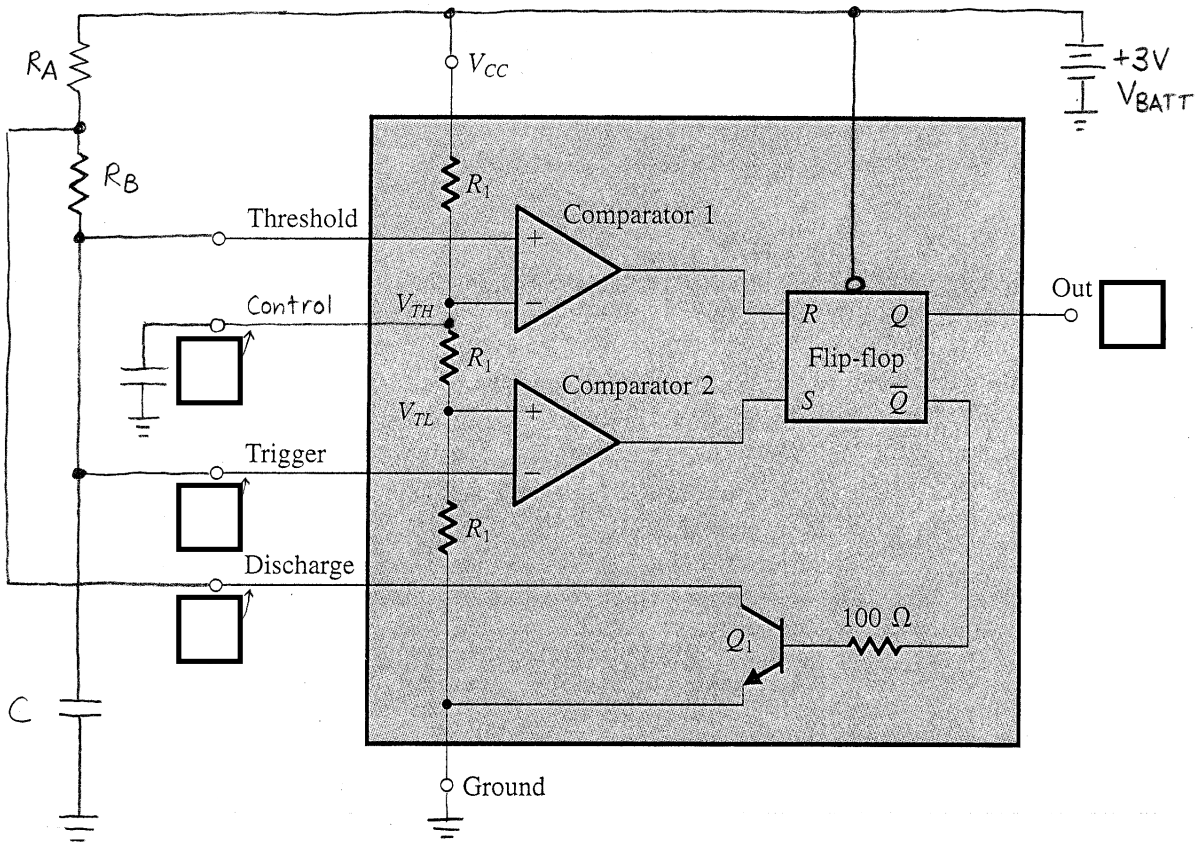
R_A
R_B
V_{CC}
+3V
V_{BATT}
R_1
Threshold
Comparator 1
Control
V_{TH}
R_1
Comparator 2
V_{TL}
Trigger
R_1
Discharge
R
Q
Flip-flop
S
$\overline{Q}$
Out
Q_1
100 Ω
C
Ground

Continuing with the previous circuit, the LM555 clock circuit designed for a battery operated system... The power supply voltage is $V_{BATT} = +3V$, as shown on the opposite page. You are reconstructing the lab work of a former colleague who was let go in the most recent round of layoffs.

The next page in your colleague's lab notebook concerns the measurement of the clock frequency, which turned out to be slightly different from the predicted frequency (indicated in the notes with a * from the LM555 data sheet) given the T_L and T_H times in the output clock waveform.

As you can see from the notes shown on the opposite page, your former colleague suspected that a nonideality of the Q1 discharge switch was affecting the LM555 circuit's behavior. The NPN switch in saturation will not pull down all the way to ground, but only to about 0.2V. Your colleague was about to re-calculate the analyses for T_L and T_H , but was called into the boss's office, terminated immediately and escorted out of the building by security.

The modified block diagram of the LM555 circuit, with the Q1 switch only pulling down to 0.2V, is shown on the opposite page.

a) Given that the Q1 switch only pulls down to 0.2V, will the resulting measured frequency f_{MEAS} be lower or higher than the prediction f_{IDEAL} of the * equation from the LM555 data sheet? (Circle one):

[5]

LOWER	HIGHER
$\mathbf{f_{MEAS} < f_{IDEAL}}$	$\mathbf{f_{MEAS} > f_{IDEAL}}$

---

b) Given that the Q1 switch only pulls down to 0.2V, determine expressions for T_L and T_H (accuracy ±10%) in terms of R_A, R_B, and C:

[10]

T_L = _____ T_H = _____

CLOCK:

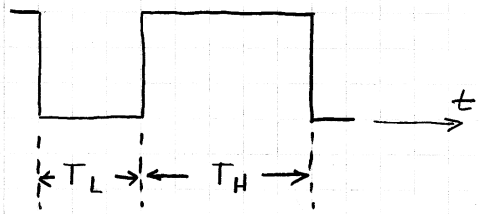

IDEAL:

$$T_L = \ln(2) R_B C \qquad T_H = \ln(2)(R_A + R_B) C$$

PREDICTED FREQUENCY $f = \frac{1}{T} = \frac{1}{(T_L + T_H)}$

$$\boxed{f = \frac{1}{\ln(2)[R_A + 2R_B]C}}$$ * FROM LM555 DATA SHEET!

MEASURED FREQUENCY IS A LITTLE OFF!? WHY?

MAYBE $V_{CE(sat)}$ OF Q_1 IS THE PROBLEM:

ONLY PULLS DOWN TO ≈ 0.2V, NOT ALL THE WAY TO ZERO

MODEL Q1 SWITCH AS

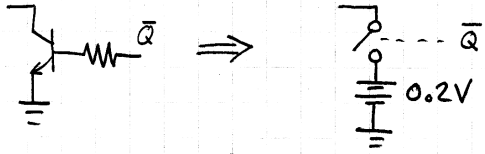
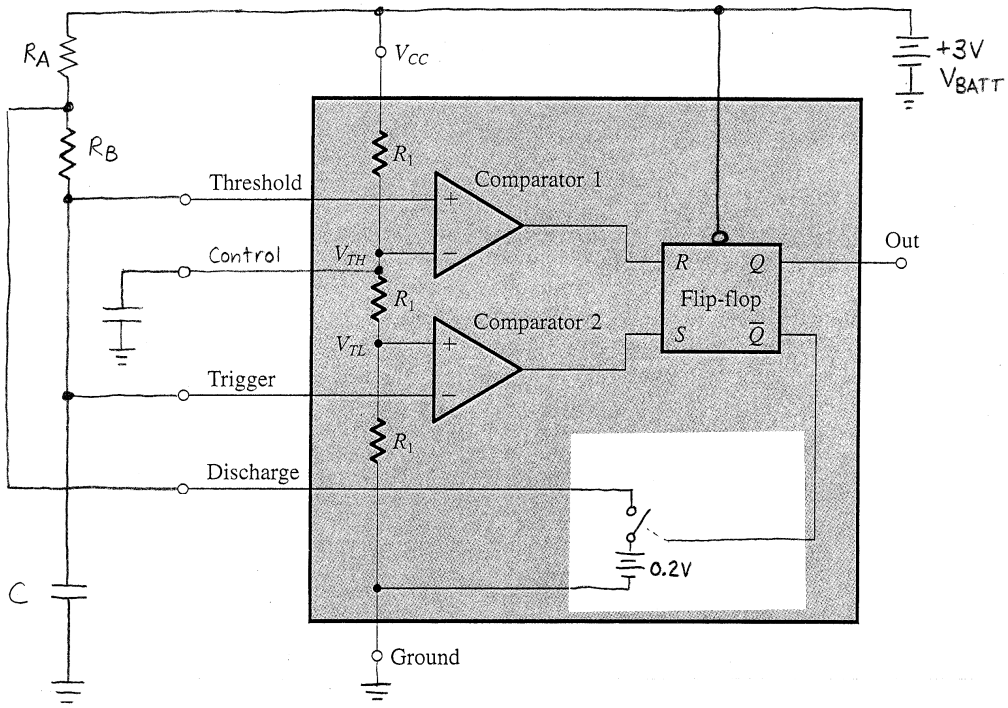
CALCULATE NEW T_L, T_H AFTER MEETING WITH BOSS...