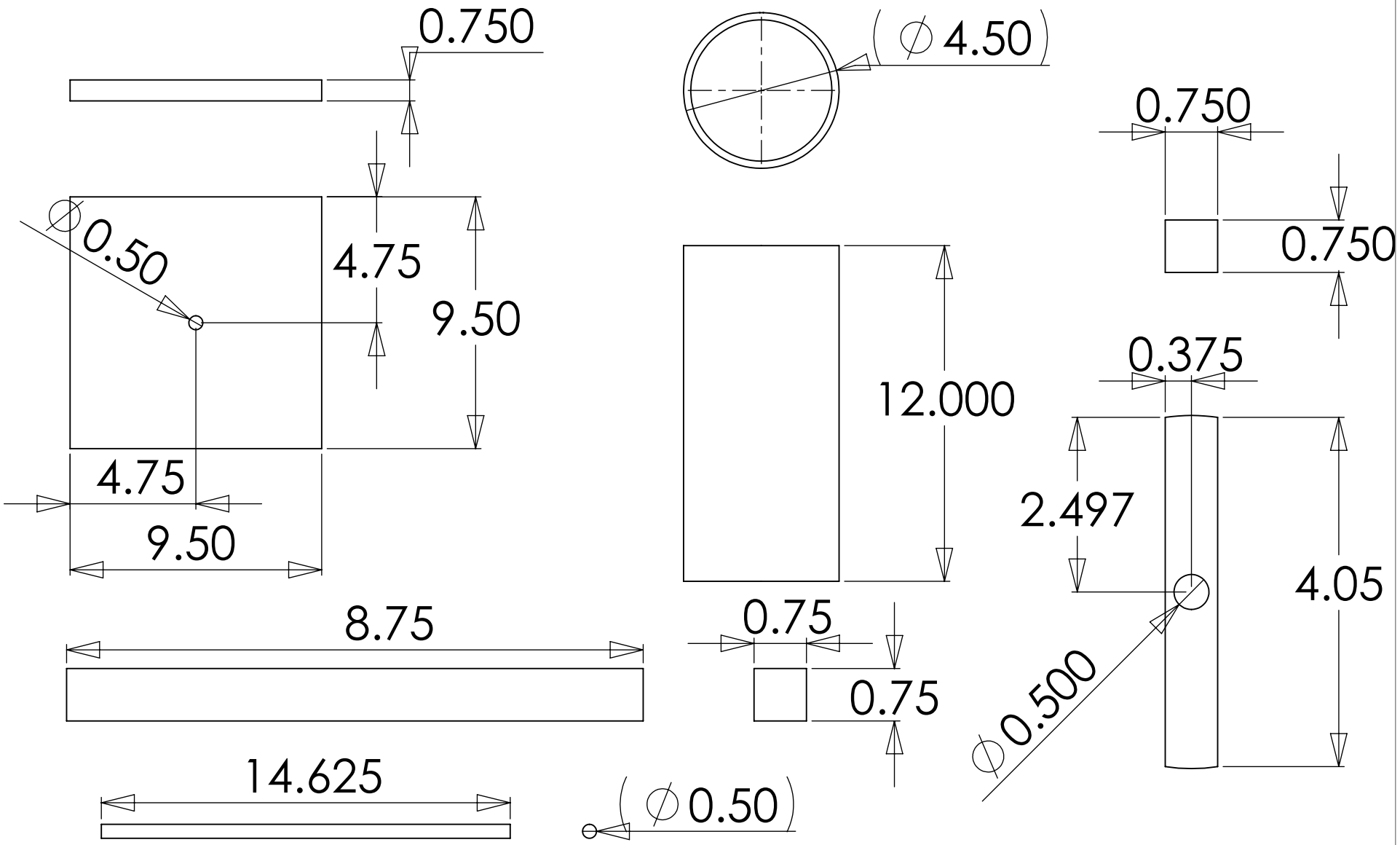

		DIMENSIONS ARE IN INCHES TOLERANCES: TWO PLACE DECIMAL ±0.50 THREE PLACE DECIMAL ±0.500 ANGULAR: MACH ±2°		NAME	DATE
			DRAWN		
			CHECKED		
			ENG APPR.		
			MFG APPR.		
		MATERIAL --	Q.A.		
			COMMENTS:		
NEXT ASSY	USED ON	FINISH --			
APPLICATION					

Savage Soccer

Dispenser Parts

SIZE	DWG. NO.	REV.
A		
SCALE:1:2	WEIGHT:	SHEET 1 OF 1