Ball Wall

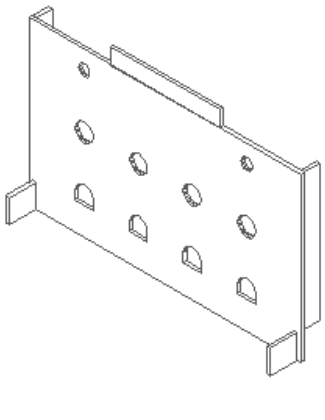
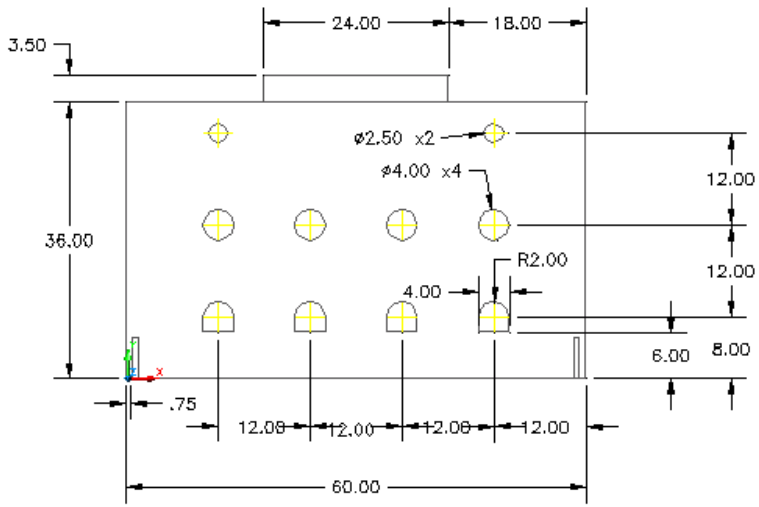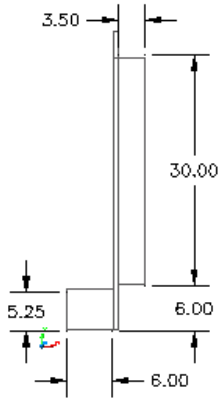
All pieces made from $\frac{3}{4}$" MDF